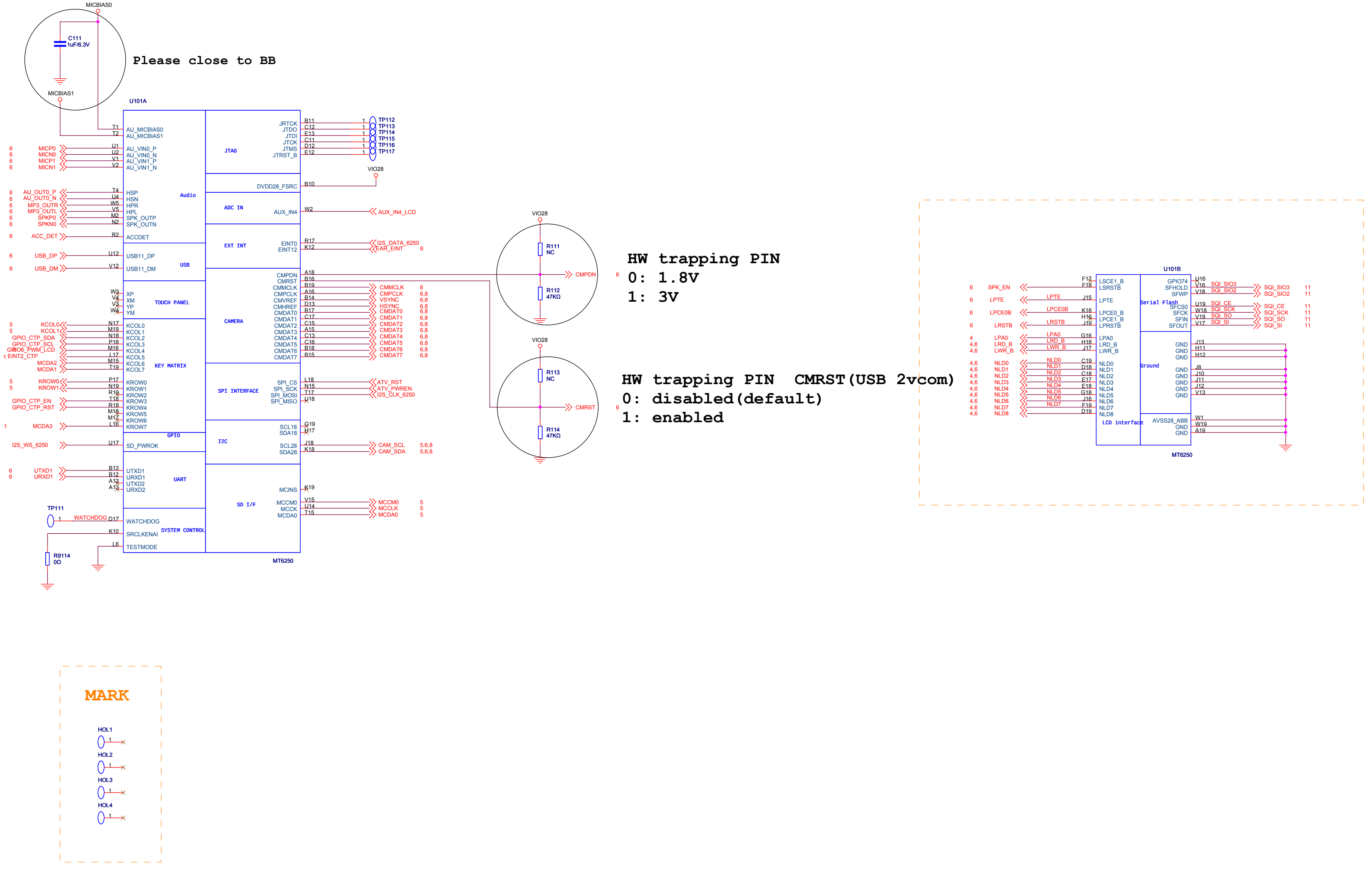

Shenzhen Gionee Communication Equipment Co., Ltd.		
Title: WBG1302_mainboard		
Size: A2	Document Number: 01 BB	Rev: V0001
Date: Tuesday, September 18, 2012	Sheet 1 of 13	

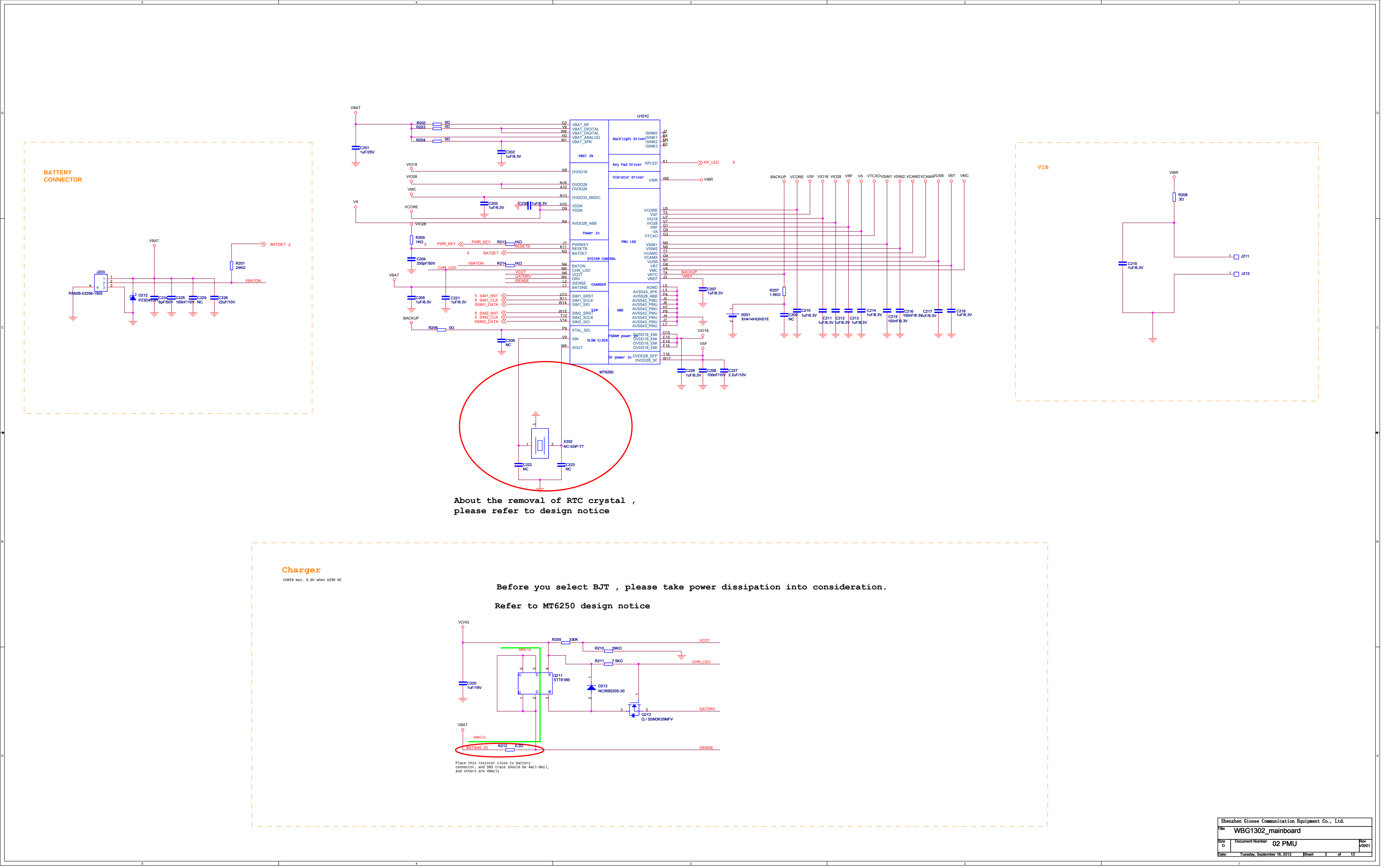
BATTERY CONNECTOR
VIB
U101C
MT6250
Charger
CHRIN max. 8.0V when U290 NC
About the removal of RTC crystal , please refer to design notice
Before you select BJT , please take power dissipation into consideration.
Refer to MT6250 design notice
Place this resister close to battery connector, and SNS trace should be 4mil-6mil, and others are 40mils
Shenzhen Gionee Communication Equipment Co., Ltd.
WBG1302_mainboard
02 PMU
Tuesday, September 18, 2012
V0001

Seril Memory Part

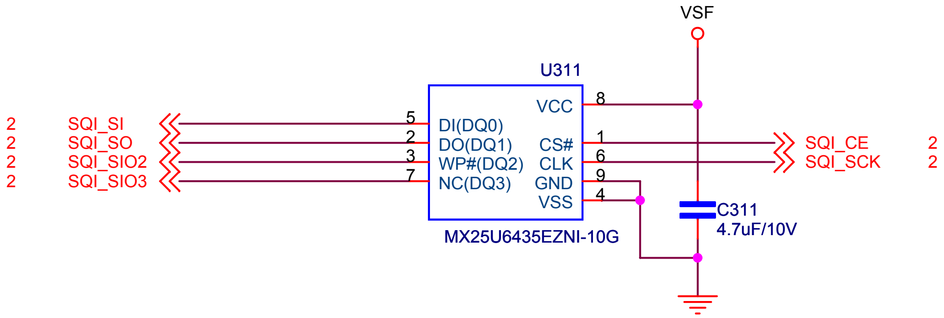

Shenzhen Gionee Communication Equipment Co., Ltd.

Title	WBG1302_mainboard	
Size A4	Document Number 03 MEMORY	Rev V0001
Date: Tuesday, September 18, 2012	Sheet 3 of 13	

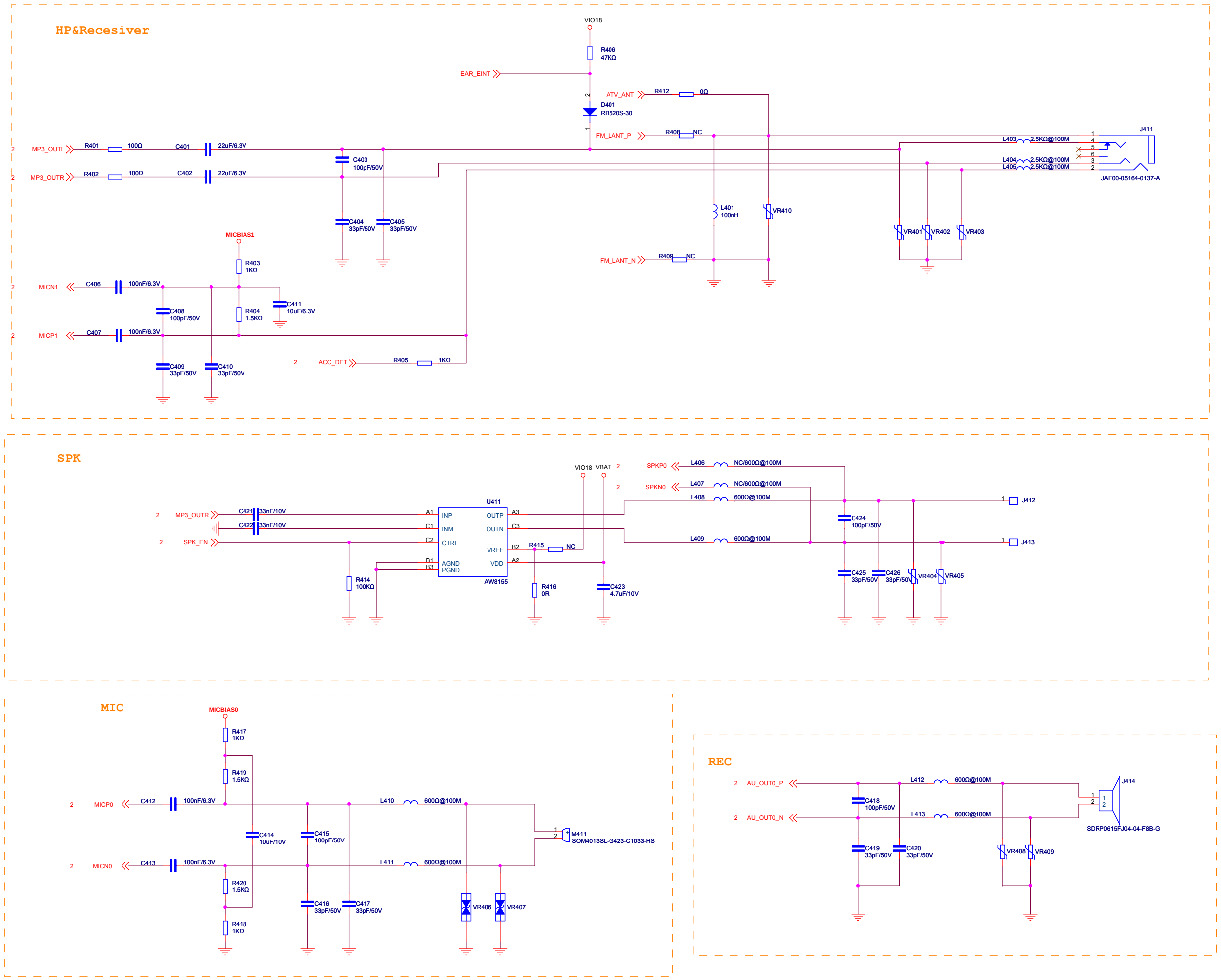

Shenzhen Gionee Communication Equipment Co., Ltd.

Title		
WBG1302_mainboard		
Size D	Document Number: 04 AUDIO	Rev V0001
Date: Tuesday, September 18, 2012	Sheet 4 of 13	

LCM connector

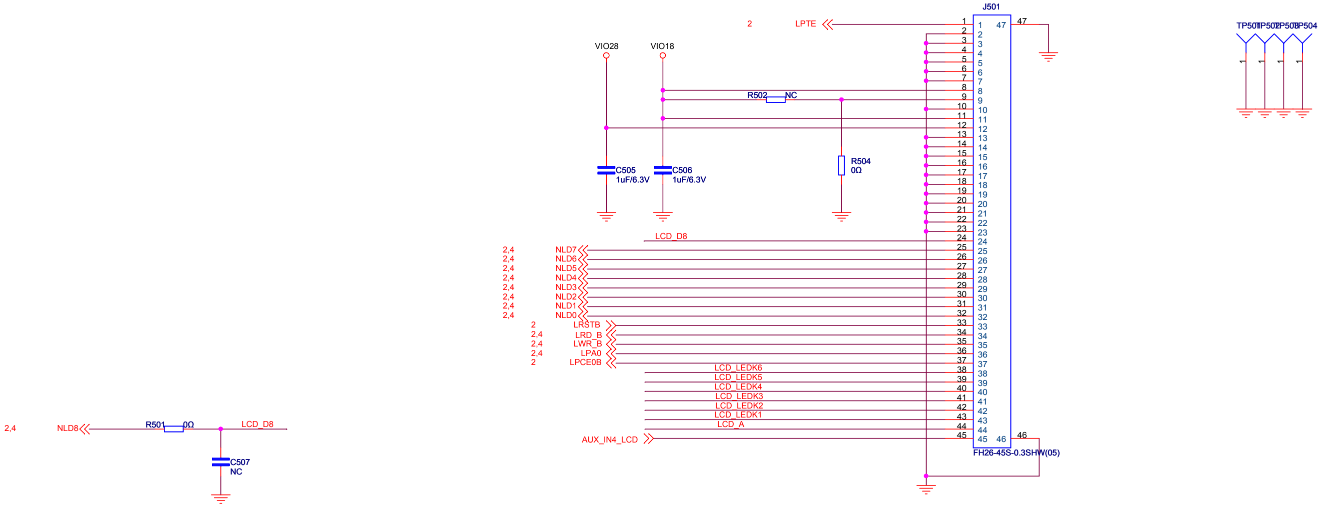

BACKLIGHT

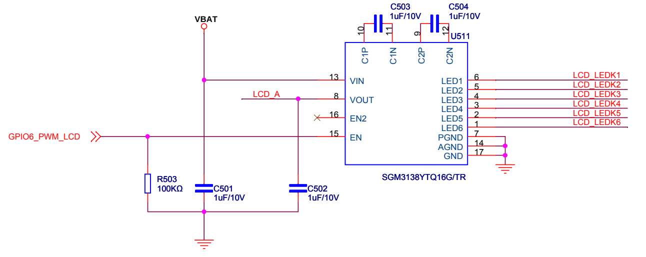

Shenzhen Gionee Communication Equipment Co., Ltd.		
Title: WBG1302_mainboard		
Size: A2	Document Number: 05 LCD	Rev: V0001
Date: Tuesday, September 18, 2012	Sheet 5 of 13	

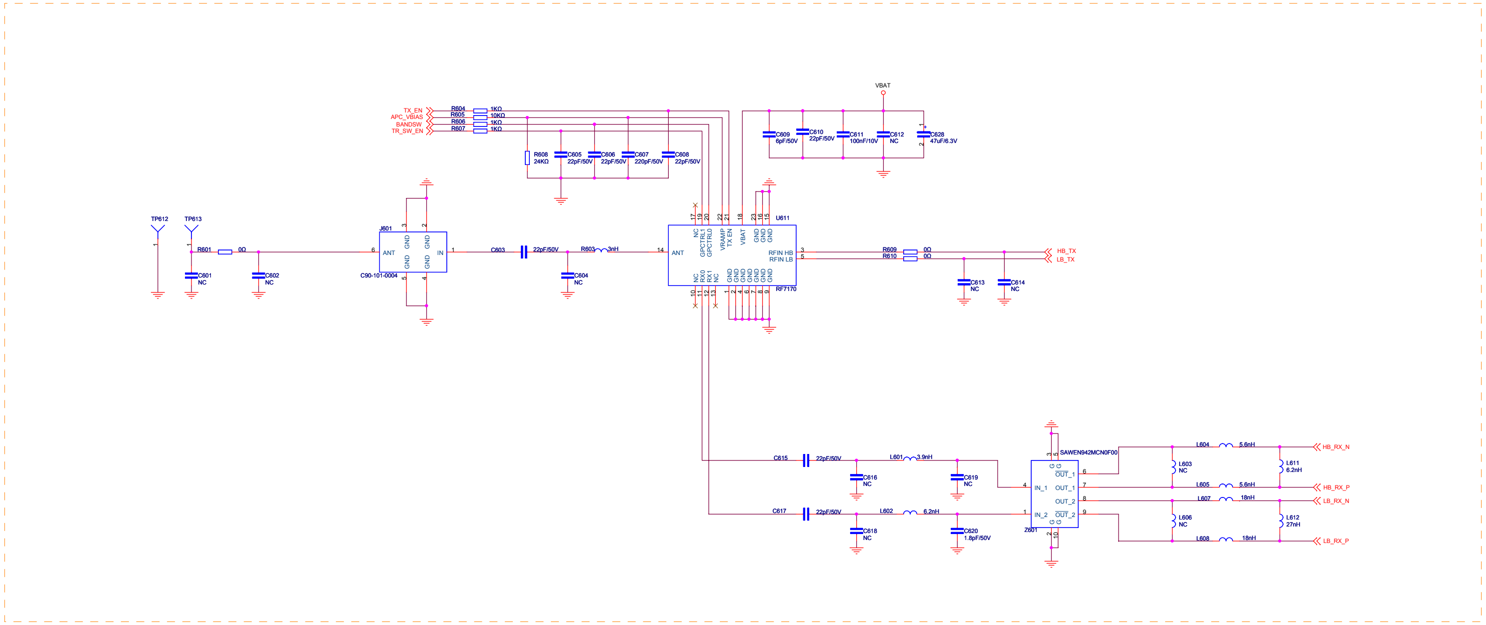

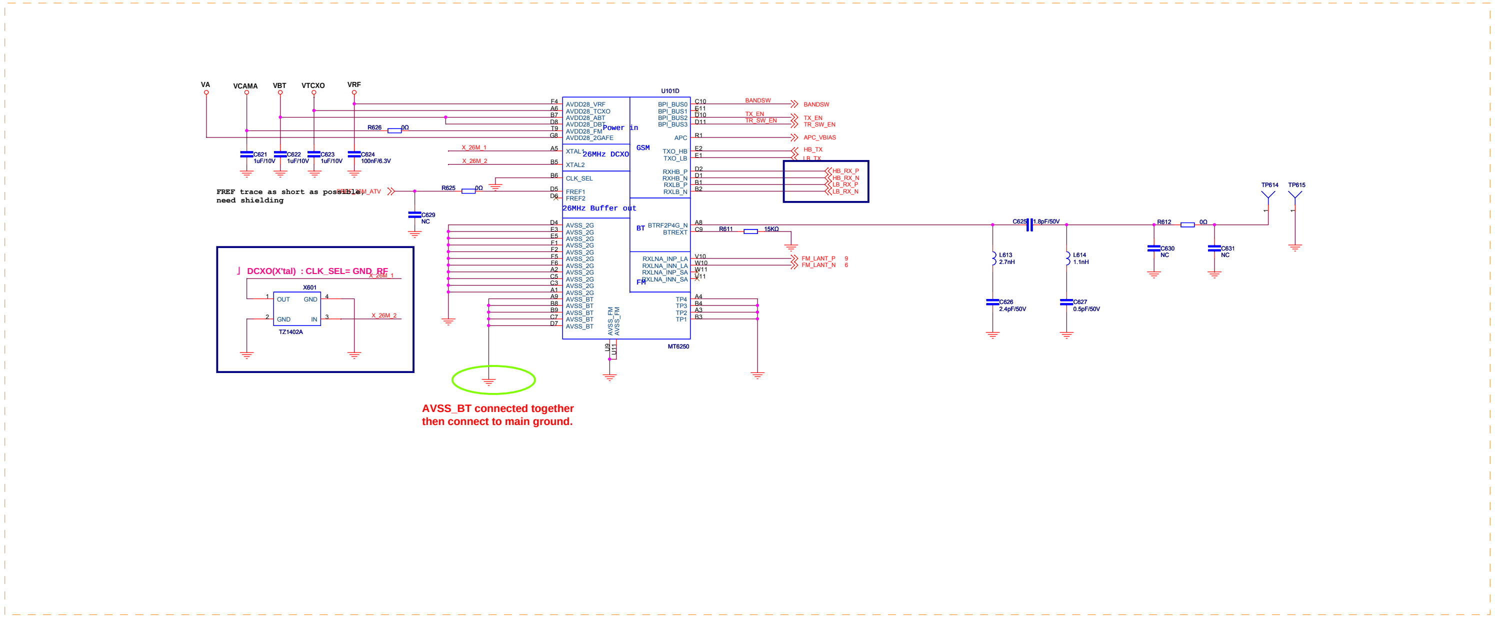

Shenzhen Gionee Communication Equipment Co., Ltd.

Title	WBG1302_mainboard	
Size A1	Document Number 06 RF	Rev V0001
Date: Tuesday, September 18, 2012	Sheet 6 of 13	

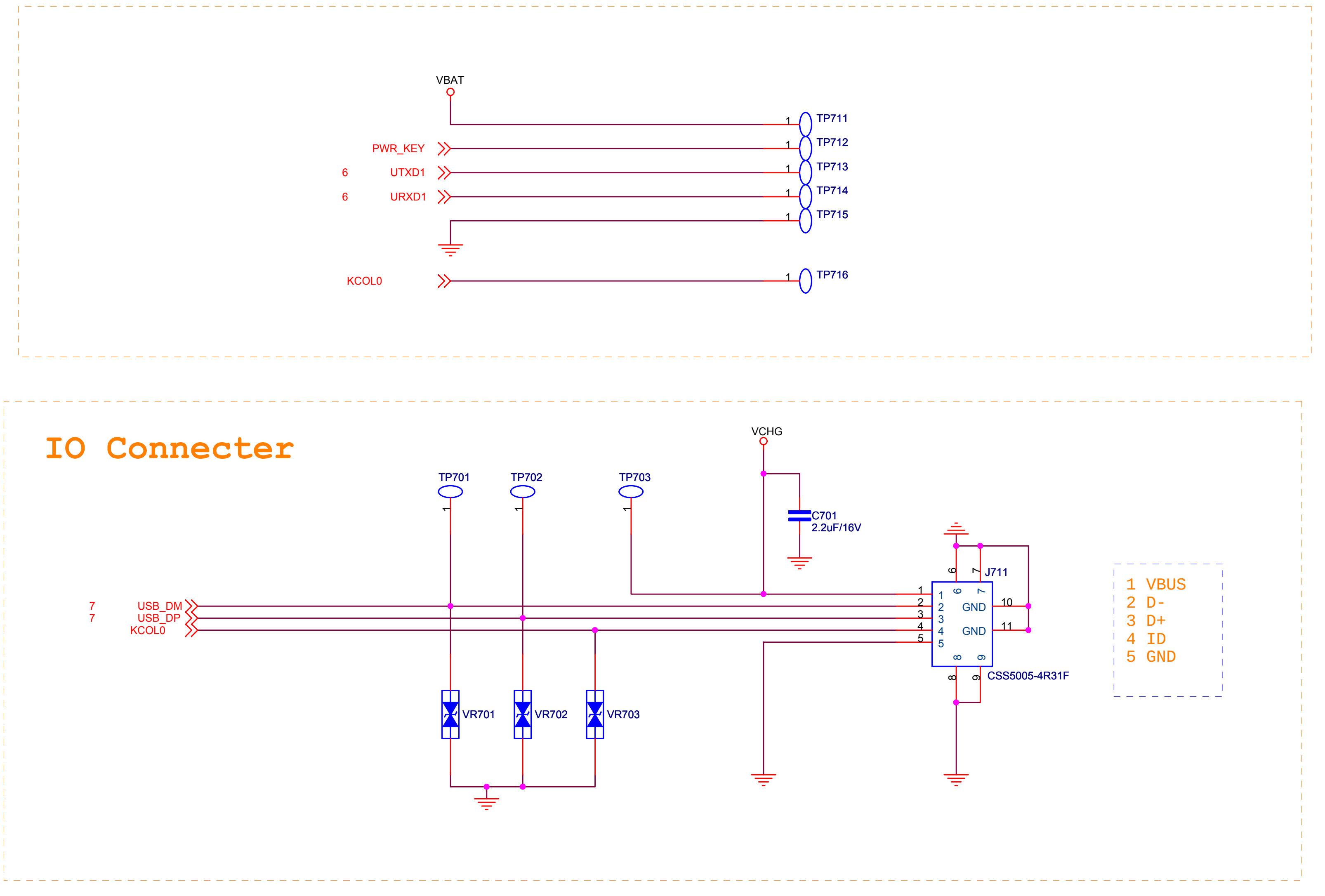

Shenzhen Gionee Communication Equipment Co., Ltd.

Title	WBG1302_mainboard	
Size B	Document Number 07 INTERFACE	Rev V0001
Date: Tuesday, September 18, 2012	Sheet 7 of 13	

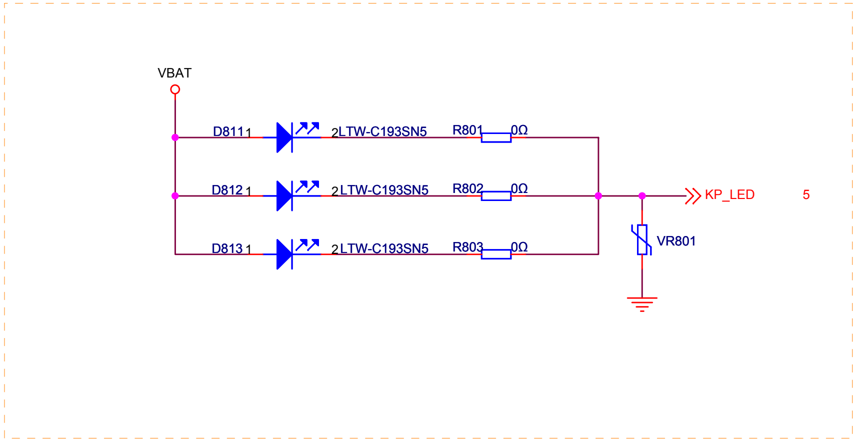

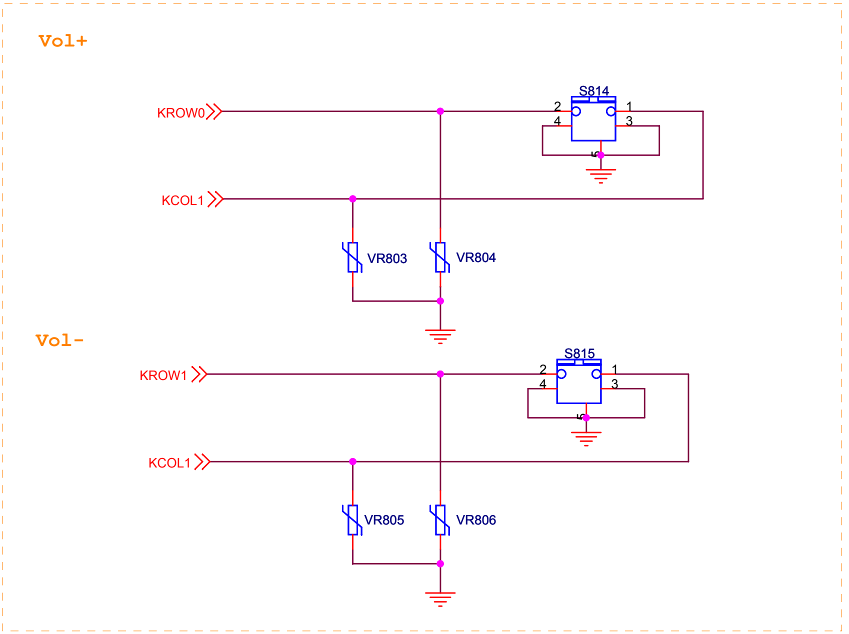

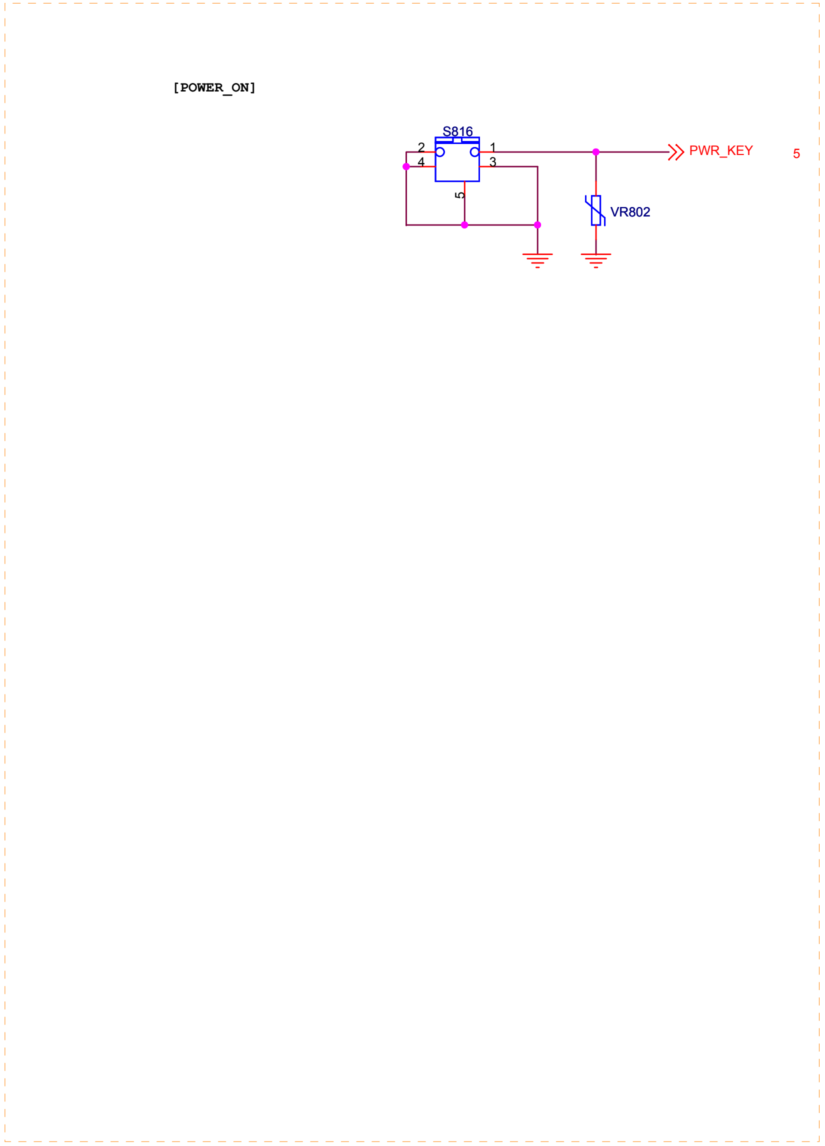

Shenzhen Gionee Communication Equipment Co., Ltd.

Title	WBG1302_board	
Size B	Document Number 08 key	Rev V0001
Date: Tuesday, September 18, 2012	Sheet 8 of 13	

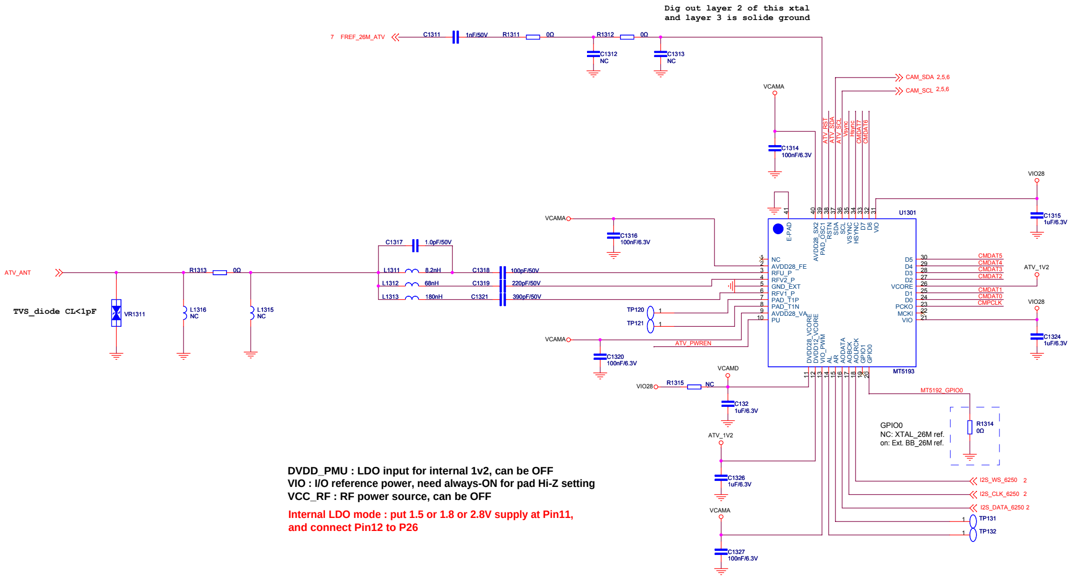

DVDD_PMU : LDO input for internal 1v2, can be OFF
VIO : I/O reference power, need always-ON for pad Hi-Z setting
VCC_RF : RF power source, can be OFF

Internal LDO mode : put 1.5 or 1.8 or 2.8V supply at Pin11,
and connect Pin12 to P26

pin21 VIO connect VIO28 2.8V IO DOMAIN

2,6	Hsync
2,6	Vsync
2,6	CMPCLK
2,6	CMDAT0
2,6	CMDAT1
2,6	CMDAT2
2,6	CMDAT3
2,6	CMDAT4
2,6	CMDAT5
2,6	CMDAT6
2,6	CMDAT7
2	ATV_PWREN
2	ATV_RST

<== GPIO ATV_PWREN must use 2.8V GPIO

Shenzhen Gionee Communication Equipment Co., Ltd.

Title	<Title>	
Size A1	Document Number <Doc>	Rev <RevCode>
Date: Tuesday, September 18, 2012	Sheet 8 of 11	

CAMERA

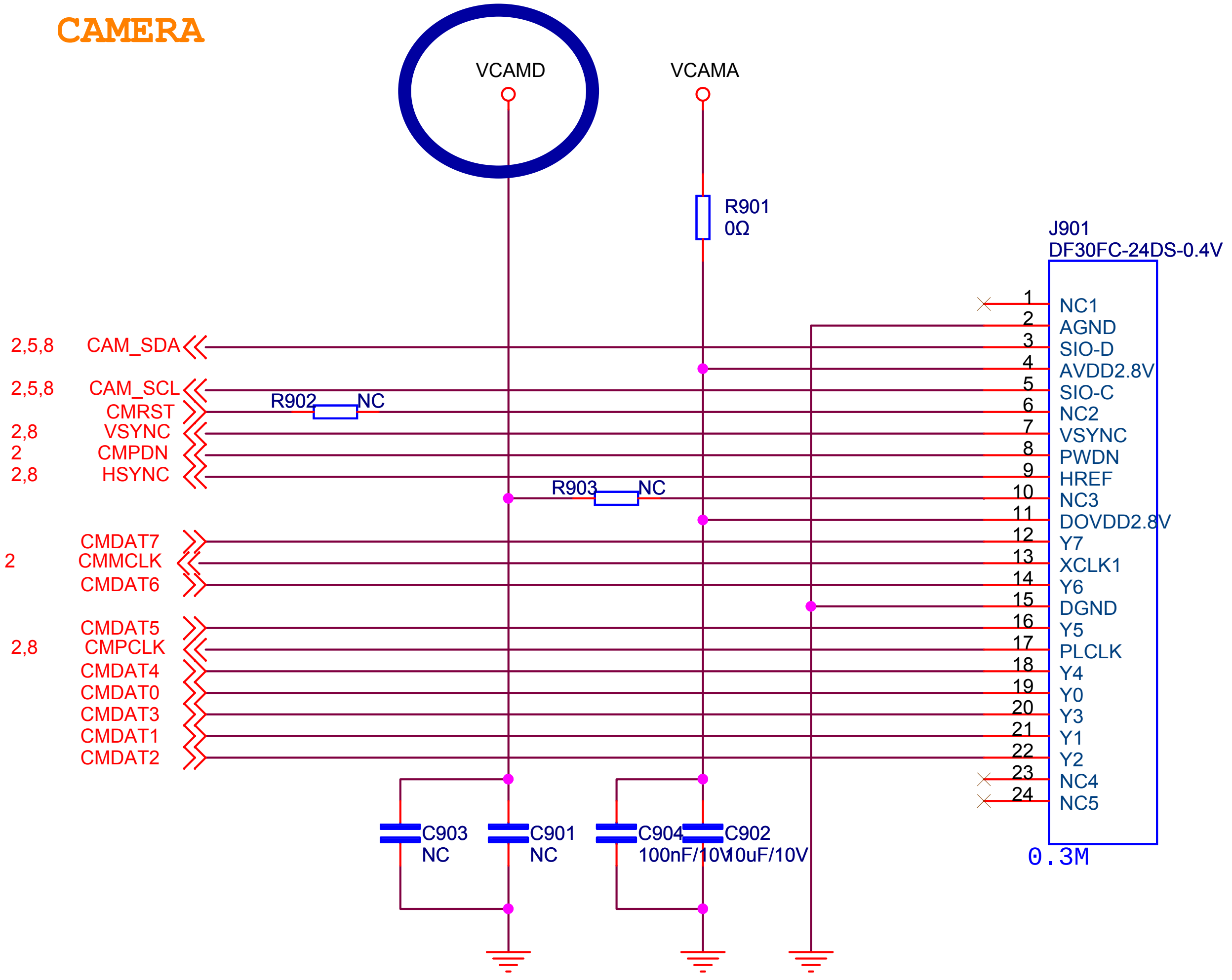

Shenzhen Gionee Communication Equipment Co., Ltd.

Title	WBG1302	
Size A	Document Number 09 CAMERA	Rev V0001
Date: Tuesday, September 18, 2012	Sheet 9 of 13	

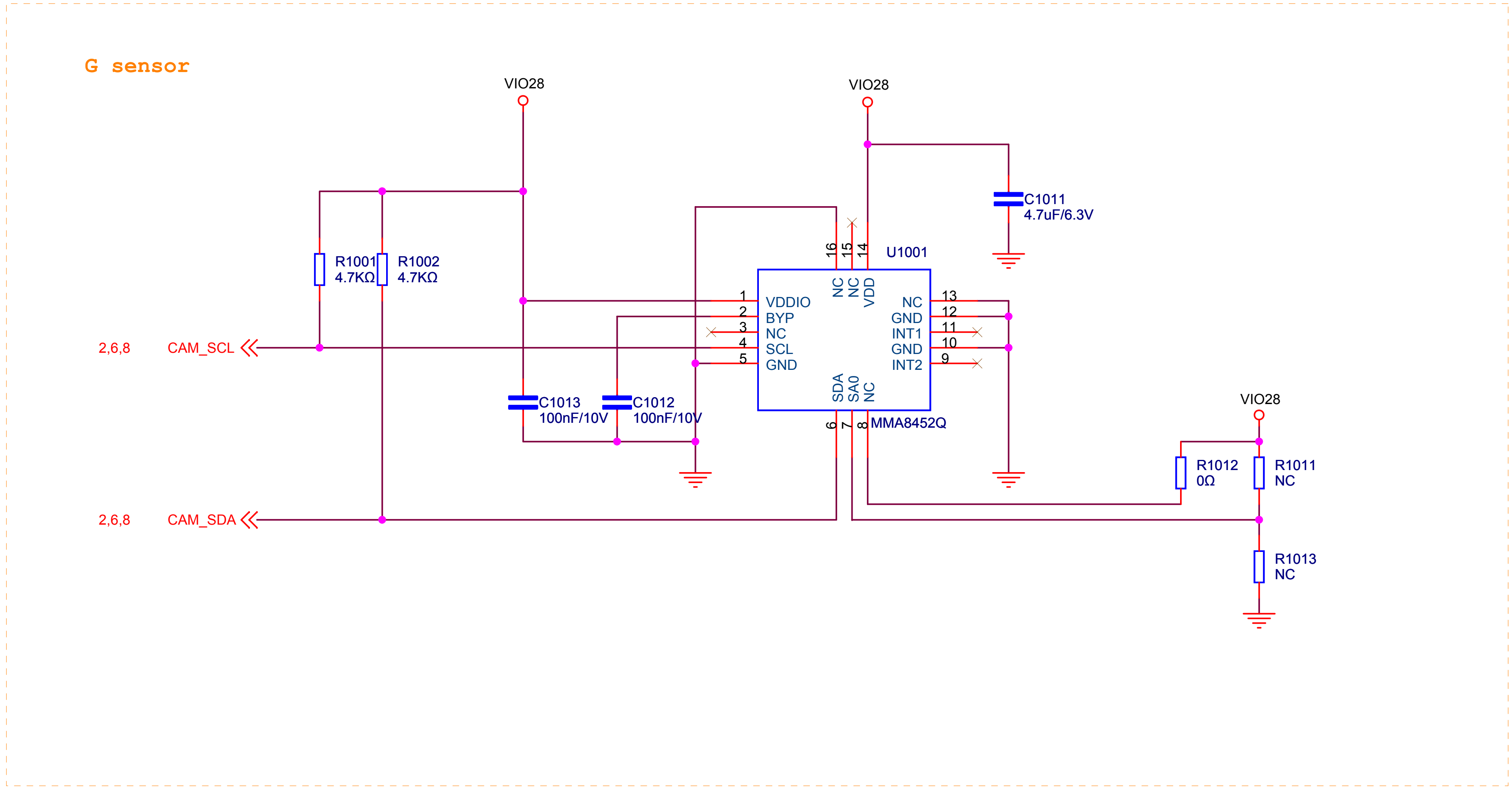

Shenzhen Gionee Communication Equipment Co., Ltd.		
Title	WBG1302_mainboard	
Size A4	Document Number 10 G-sensor	Rev V0001
Date: Tuesday, September 18, 2012	Sheet 10 of 13	

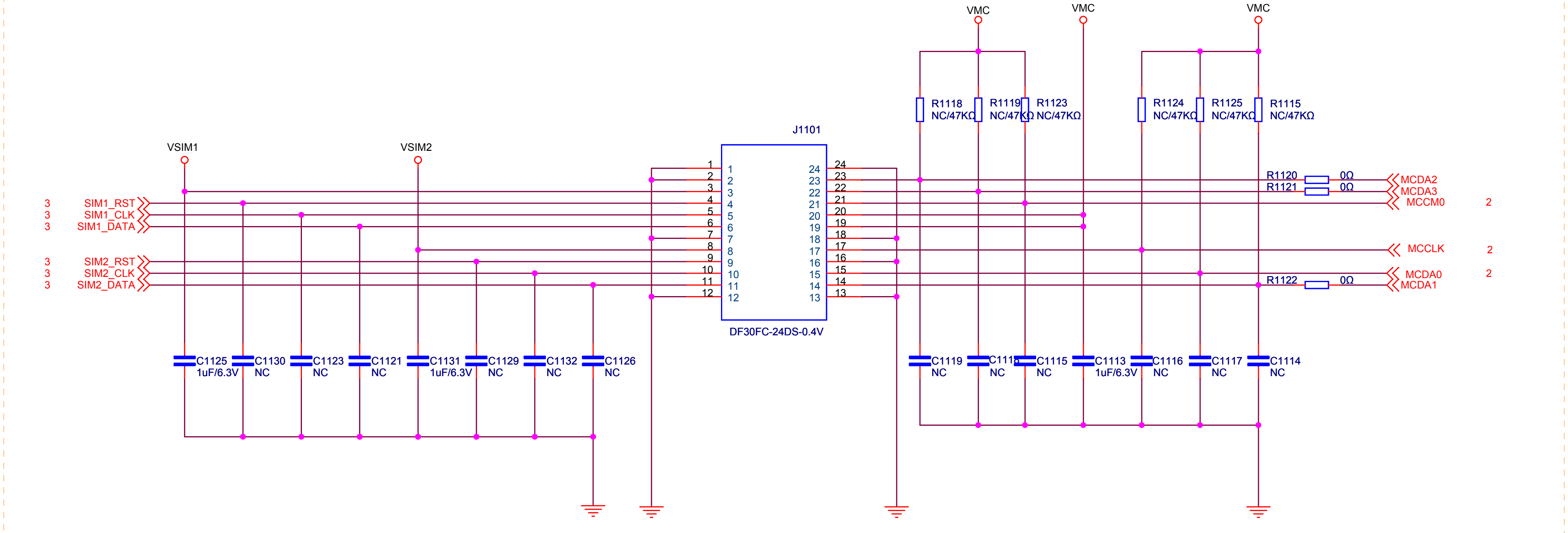

Shenzhen Gionee Communication Equipment Co., Ltd.

Title	WBG1302_mainboard	
Size B	Document Number: 11 T card +SIM	Rev V0001
Date: Tuesday, September 18, 2012	Sheet 11 of 13	

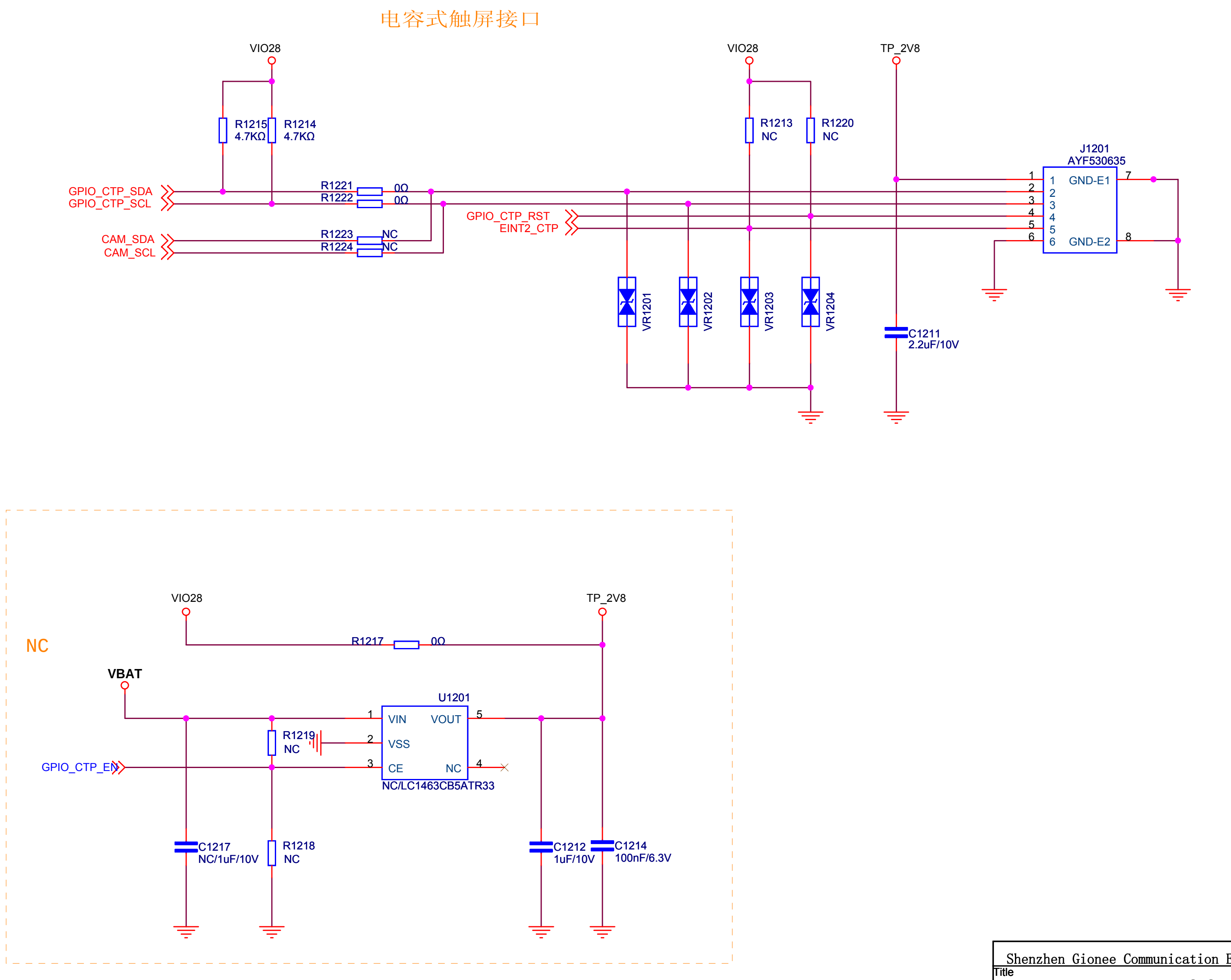

Shenzhen Gionee Communication Equipment Co., Ltd.

Title: **WBG1302_mainboard**		
Size: B	Document Number: **12 CTP**	Rev: V0001
Date: Tuesday, September 18, 2012	Sheet 12 of 13	